CIRCUIT DIAGRAM / PC BOARD

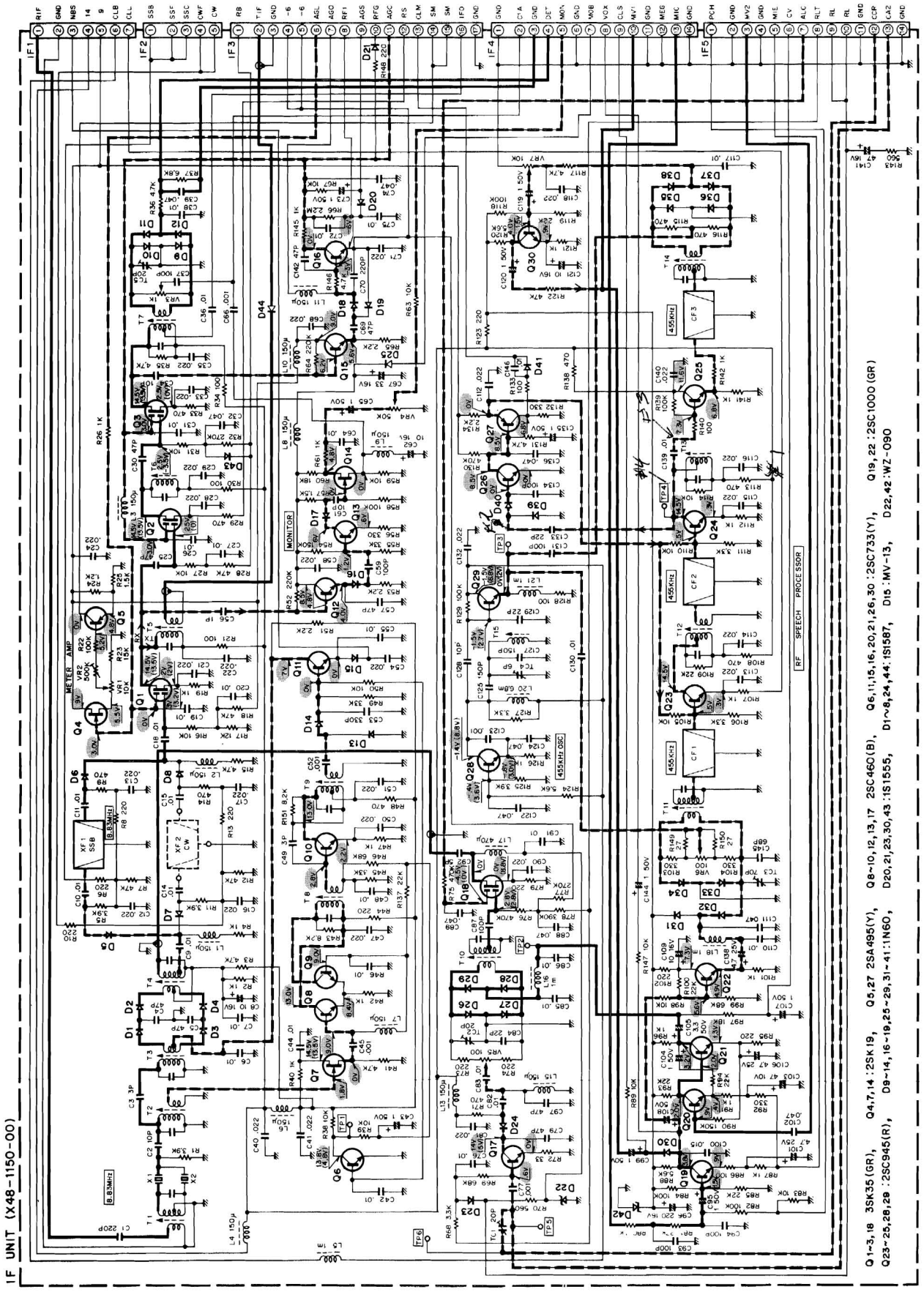

CIRCUIT DIAGRAM / PC BOARD

▼ RF (X44-1150-00)

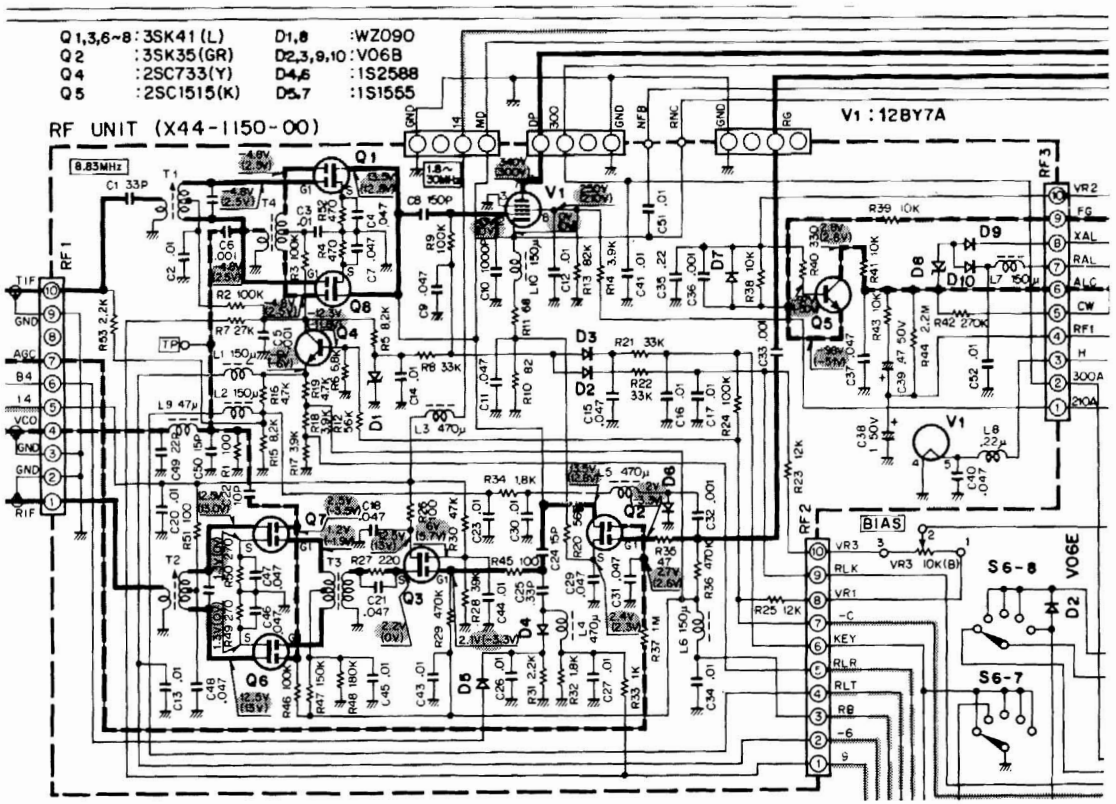

3SK35
3SK41

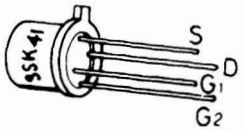
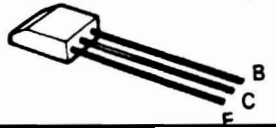
2SC1515 (K)